ELLISSE FLOOR/WALL

Federico Palazzari

Realised in various versions through an innovative technology developed by Nemo for coupling extrusions, Ellisse guarantees diffused direct and indirect lighting with the LED housed within the structure while remaining unobtrusive. The design is linear and contemporary, while an elegant black marble base becomes a pedestal for the floor version.

2700K

LAMPING

Source	linear LED
Total power	66W
Emission	diffused
Switching	dimmable on cable
Tension	120V
Color temperature	2700K
Luminous flux	3450lm
Typ CRI	85
IP class	20
Dimensions	27.6'x 4.7'x 53'/54'H
Materials	aluminum
Notes	base and wall hanger to be ordered separately, cable length 16.4', 3000K, 3500K and 4000K available on request, black RAL 9005
Accessories	Base, Marble marquinia black | Wall hanger, aluminium gold polished anodized

Codes	*Structure*
ELP LNN 21	black
ELP LGN 21	gold polished anodized

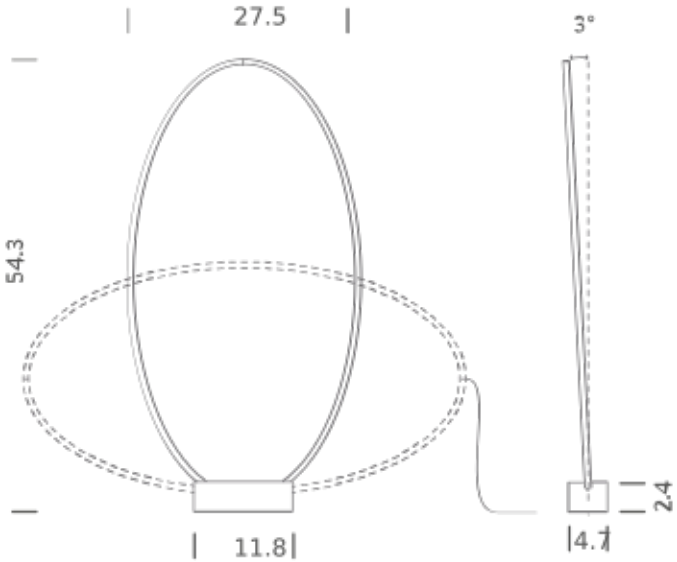

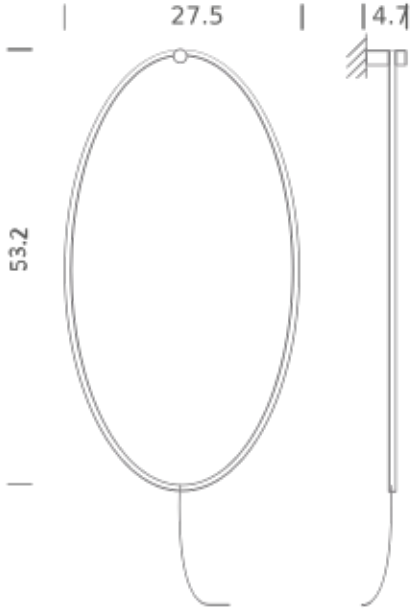

ACCESSORY:

base

wall hanger