KEPLER

Arihiro Miyake

The Kepler collection is made of painted extruded aluminium, whose continuous line is obtained through a three-dimensional manufacturing process developed by Nemo. Designed on the basis of the mathematical principle of the Möbius strip. Diffuser in opaque technopolymer.

DOWNLIGHT 2700K

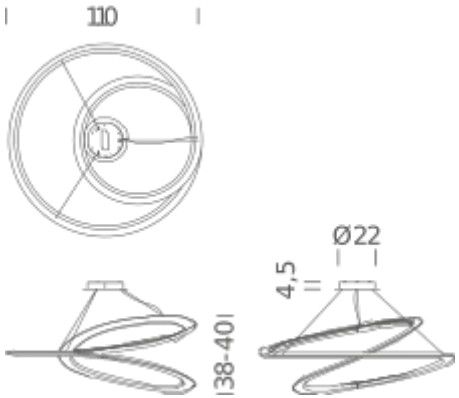

LAMPING

Source	linear LED
Total power	83W
Emission	diffused
Switching	dimmable 1-10V
Tension	110-240V
Color temperature	2700K
Luminous flux	4800lm
Typ CRI	85
IP class	20
Materials	aluminium + PC
Notes	adjustable cable length from 2,5m to 0,4m, DALI version on request, TRIAC VERSION on request
Net lamp weight	9 kg

Codes	*Structure*
KEP LWW 54	white
KEP LNN 54	black
KEP LOW 54	gold

PACKAGE

Package 01	Dimension: 121x121x52 cm / Gross weight: 19 kg

Certificazioni

DOWNLIGHT 3000K

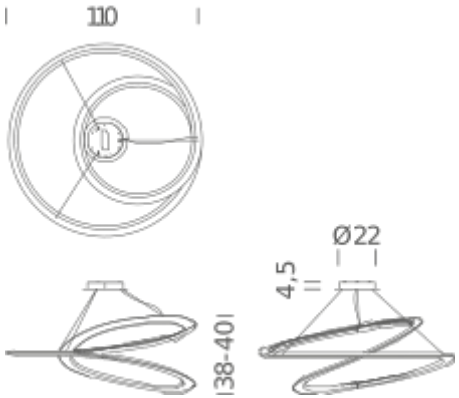

LAMPING

Source	linear LED
Total power	83W
Emission	diffused
Switching	dimmable 1-10V
Tension	110-240V
Color temperature	3000K
Luminous flux	4800lm
Typ CRI	85
IP class	20
Materials	aluminium + PC
Notes	adjustable cable length from 2,5m to 0,4m, DALI version on request
Net lamp weight	9 kg

Codes	*Structure*
KEP LWW 52	white
KEP LNN 52	black
KEP LOW 52	gold painted

PACKAGE

Package 01	Dimension: 121x121x52 cm / Gross weight: 19 kg

Certificazioni

UPLIGHT 2700K

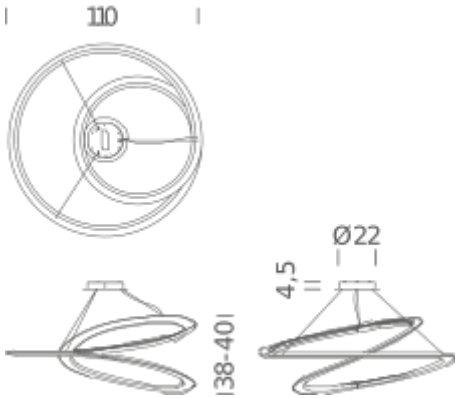

LAMPING

Source	linear LED
Total power	83W
Emission	diffused indirect
Switching	dimmable 1-10V
Tension	110-240V
Color temperature	2700K
Luminous flux	4800lm
Typ CRI	85
IP class	20
Materials	aluminium + PC
Notes	adjustable cable length from 2,5m to 0,4m, DALI version on request
Net lamp weight	9 kg

Codes	*Structure*
KEP LWW 53	white
KEP LNN 53	black
KEP LOW 53	gold painted

PACKAGE

Package 01	Dimension: 121x121x52 cm / Gross weight: 19 kg

Certificazioni

UPLIGHT 3000K

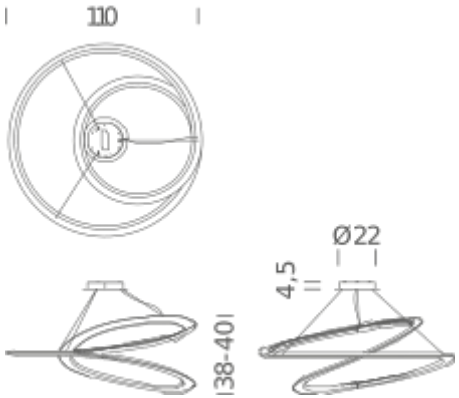

LAMPING

Source	linear LED
Total power	83W
Emission	diffused indirect
Switching	dimmable 1-10V
Tension	110-240V
Color temperature	3000K
Luminous flux	4800lm
Typ CRI	85
IP class	20
Materials	aluminium + PC
Notes	adjustable cable length from 2,5m to 0,4m, DALI version on request
Net lamp weight	9 kg

Codes	*Structure*
KEP LWW 51	white
KEP LNN 51	black
KEP LOW 51	gold

PACKAGE

Package 01	Dimension: 121x121x52 cm / Gross weight: 19 kg

Certificazioni