ELLISSE PENDANT MEGA

Federico Palazzari

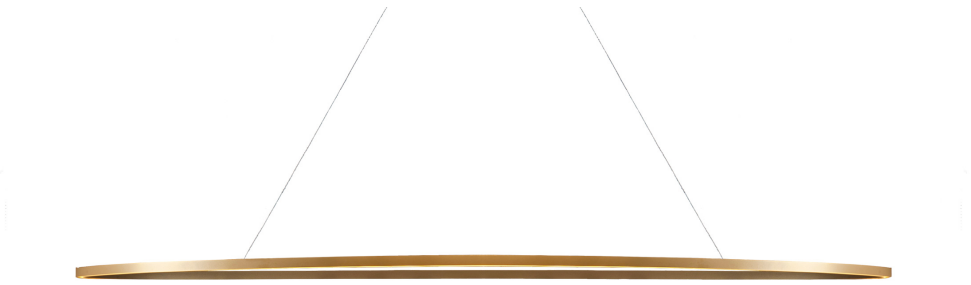

Suspensions, lampadaires et appliques fabriqués grâce à une technologie innovante développée par Nemo spécifiquement pour le couplage d'extrusions. Le design d'Ellisse est linéaire et contemporain et garantit un éclairage diffus direct et indirect grâce à la LED logée dans la structure sans être intrusive. Une
élégante base en marbre noir devient un piédestal pour la version au sol.

DOWNLIGHT 2700K

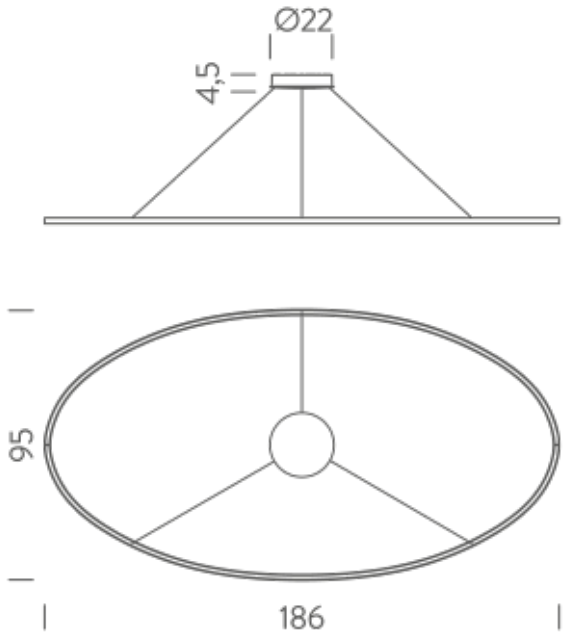

LAMPING

Source	linear LED
Total power	76W
Emission	diffused
Switching	dimmable 1-10V
Tension	110-240V
Color temperature	2700K
Luminous flux	4425lm
Typ CRI	85
IP class	20
Materials	Aluminium
Notes	adjustable cable length from 2,5 to 0,4 m, DALI version on request, TRIAC VERSION on request

Codes	*Structure*
ELP LW2 59	white
ELP LN2 59	black
ELP LO2 59	gold painted

PACKAGE

Package 01	Dimension: 14x101x201 cm / Gross weight: 7,5 kg

Certificazioni

DOWNLIGHT 3000K

LAMPING

Source	linear LED
Total power	76W
Emission	diffused
Switching	dimmable 1-10V
Tension	110-240V
Color temperature	3000K
Luminous flux	4425lm
Typ CRI	85
IP class	20
Materials	Aluminium
Notes	adjustable cable length from 2,5 to 0,4 m, DALI version on request

Codes	*Structure*
ELP LWW 59	white
ELP LNW 59	black
ELP LOW 59	gold painted

PACKAGE

Package 01	Dimension: 14x101x201 cm / Gross weight: 7,5 kg

Certificazioni

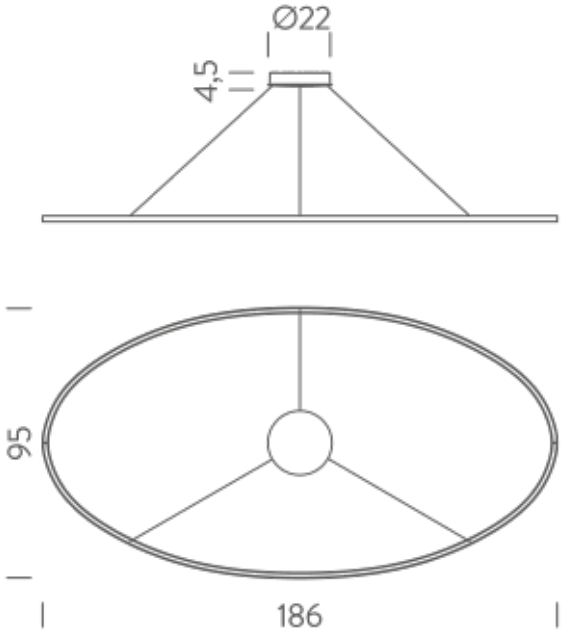

UPLIGHT 2700K

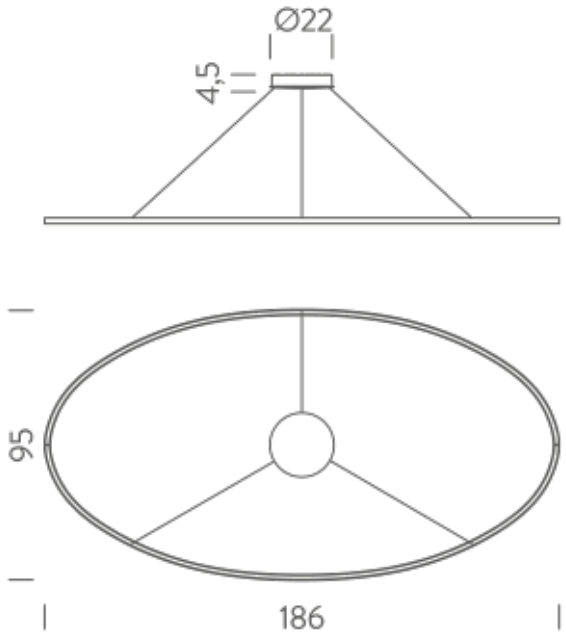

LAMPING

Source	linear LED
Total power	76W
Emission	diffused
Switching	dimmable 1-10V
Tension	110-240V
Color temperature	2700K
Luminous flux	4425lm
Typ CRI	85
IP class	20
Materials	Aluminium
Notes	adjustable cable length from 2,5 to 0,4 m, DALI version on request

Codes	*Structure*
ELP LW2 58	white
ELP LN2 58	black
ELP LO2 58	gold painted

PACKAGE

Package 01	Dimension: 14x101x201 cm / Gross weight: 7,5 kg

Certificazioni

UPLIGHT 3000K

LAMPING

Source	linear LED
Total power	76W
Emission	diffused
Switching	dimmable 1-10V
Tension	110-240V
Color temperature	3000K
Luminous flux	4425lm
Typ CRI	85
IP class	20
Materials	Aluminium
Notes	adjustable cable length from 2,5 to 0,4 m, DALI version on request

Codes	*Structure*
ELP LWW 58	white
ELP LNW 58	black
ELP LOW 58	gold painted

PACKAGE

Package 01	Dimension: 14x101x201 cm / Gross weight: 7,5 kg
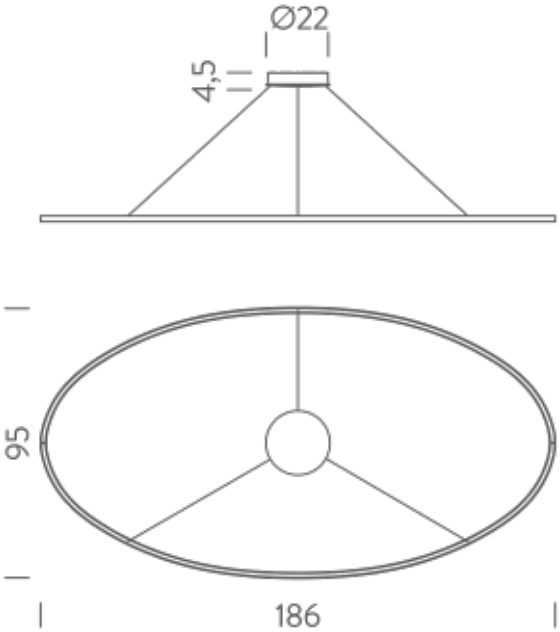
Certificazioni